HYPERLABS™
Innovation at Hyperspeed since 1992

HL964x Series Bias Tees (125 kHz to 67 GHz, 1000 mA)

Features and Technical Specifications[1] (HL9647 shown)

Bandwidth	125 kHz to > 67 GHz (opt. -11) 150 kHz to > 67 GHz (opt. -30)
Insertion Loss	2.3 dB, 1 MHz to 67 GHz, (opt. -JJ) See *Fig. 1*
Return Loss	15 dB f ≤ 35 GHz, all options 10 dB f > 35 GHz, all options See *Fig. 3*
Amplitude Match (opt. -M only)	± 0.1 dB, f ≤ 67 GHz, all options See *Fig. 5*
Phase Match (opt. -M only)	± 4°, f = 40 GHz
Breakdown Voltage	11 V, max (opt. -11) 30 V, max (opt. -30)
Maximum Current	1000 mA
Isolation *DC bias port to RF ports*	> 35 dB
Group Delay	≈ 110 ps ± 10 ps ripples, all options See *Fig. 4*
Rise Time (10-90%)	5 ps, all options
Connectors (AC / AC+DC)	1.85 mm Standard configuration is jack/plug with either pins or SMA jack for DC bias. See page 2 for other configurations
Temperature Limits	-40° to +70° C, operating
RoHS Compliant	Yes, assembled with lead-free solder
REACH Compliant	Yes
Warranty	1 year, see website

NOTE 1 - Unless otherwise noted, the specifications in this table are typical for Model Number HL9647 using the standard configuration (-JP, jack/plug). Full specifications for this and related models are available on page 2 of this datasheet.



HL9647, Option -M-JPC shown (DC pins)



HL9647, Option -M-JPS shown (SMA DC port)

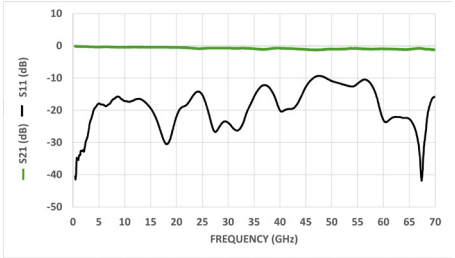

Typical HL9647 Insertion and Return Loss

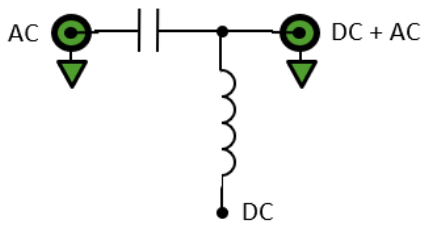

HL964x Schematic and Port Assignments

PRODUCT SUMMARY

The HL964x Series are ultra-broadband bias tees with a maximum insertion loss of 2.3 dB throughout the specified bandwidth range.

The HL964x blocks any existing DC signal and allows for the insertion of a DC bias current into a circuit with minimal perturbation of the impedance of a 50 ohm transmission line.

These devices can be used for biasing amplifiers, lasers, optical modulators, and other devices.

Applications include 112 Gbps PAM4 communications systems, optical communication systems, high-speed data systems, level shifting, cascading, and interfacing between devices with incompatible DC operating points.

MODELS & OPTIONS

The following models are available:

- ***HL9644***, 40 GHz
- ***HL9645***, 50 GHz
- ***HL9647***, 67 GHz

The following options are available:

- ***-M***, matched pair
- ***-U***, unmatched part(s)

- ***-11***, 11 V breakdown
- ***-30***, 30 V breakdown

CONNECTORS

Connectors should be specified according to the configurations listed on Page 2

HL964x Full Specifications

Parameter	HL9644	HL9645	HL9647	Comments
Upper Frequency Limit	> 40 GHz	> 50 GHz	> 67 GHz	3 dB roll-off point, relative to nominal insertion loss
Lower Frequency Limit See *Fig. 2*	125 kHz (opt. -11) 150 kHz (opt. -30)			3 dB roll-off point
Maximum Current	1000 mA			
Breakdown Voltage	11 V, max (opt. -11) 30 V, max (opt. -30)			
Insertion Loss See *Fig. 1*	2.3 dB, 1 MHz ≤ f ≤ 40 GHz	2.3 dB, 1 MHz ≤ f ≤ 50 GHz	2.3 dB, 1 MHz ≤ f ≤ 67 GHz	Typical
Return Loss See *Fig. 3*	15 dB, f ≤ 35 GHz 10 dB, f > 35 GHz			Typical, within specified operating frequency
Amplitude Match See *Fig. 5*	± 0.1 dB, (opt. -M)			Typical, opt. -M
Phase Match	± 4°, f = 40 GHz (opt. -M)			Typical, opt. -M
Rise Time	8.75 ps	7 ps	5 ps	Typical
Group Delay See *Fig. 4*	107 ps ± 10 ps ripple	107 ps ± 10 ps ripple	110 ps ± 10 ps ripple	All options
Isolation *DC bias port to RF ports*	> 35 dB			Typical
Impedance	50 Ω			Input and Output
DC Resistance	1.4 Ω			DC to AC+DC
Connector Configurations (specify when ordering)	Port 1 (AC): jack (J) or plug (P) Port 2 (AC+DC): jack (J) or plug (P) Port 3 (DC): SMA jack (S) or capacitive feedthru pins (C) *Standard configuration is -JPS or -JPC*			E.g. config -JPS: AC jack, AC+DC plug, DC jack Or, config. -JJC: AC jack, AC+DC jack, DC pins
Dimensions (W x D x H)	1.95” x 1.30” x 0.53” 49.53 x 33.02 x 13.46 mm			Package including connectors
Weight	24 g (0.85 oz.)			
Operating Temperature	-40° to +70° C			Case temperature
RoHS Compliant	Yes, assembled with lead-free solder			

Note: All specifications are based on test results using the standard connector configuration. Specifications may vary slightly for other configurations.

HL964x Bandwidth and Insertion Loss

Figure 1 shows the insertion loss and bandwidth of the HL9647 from 10 MHz to 67 GHz.

Figure 2 shows the low-frequency response of this same configuration to 100 Hz.

Other models show similar performance within their respective specified bandwidths.

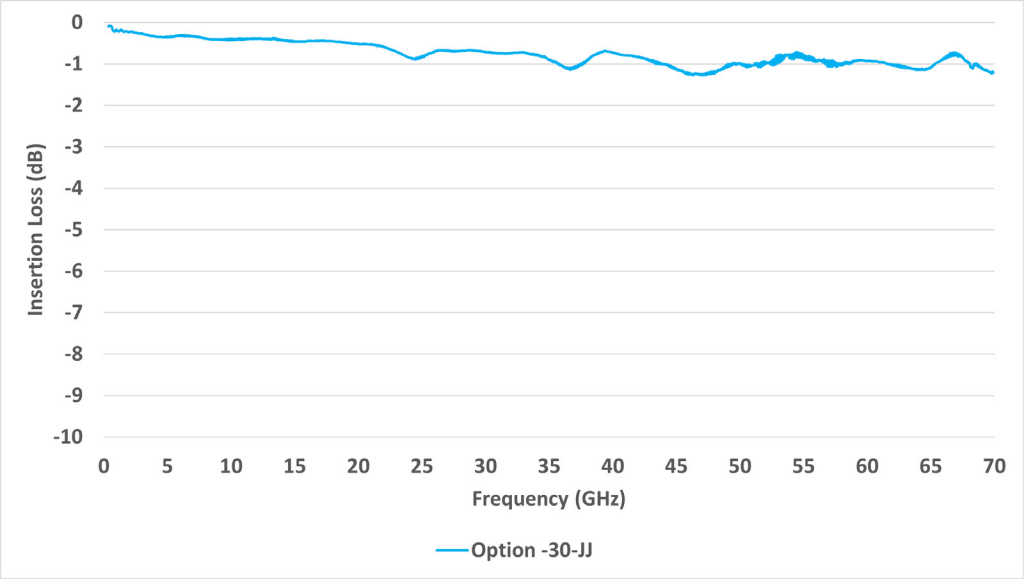

Figure 1: Typical HL9647 Bandwidth and Insertion Loss

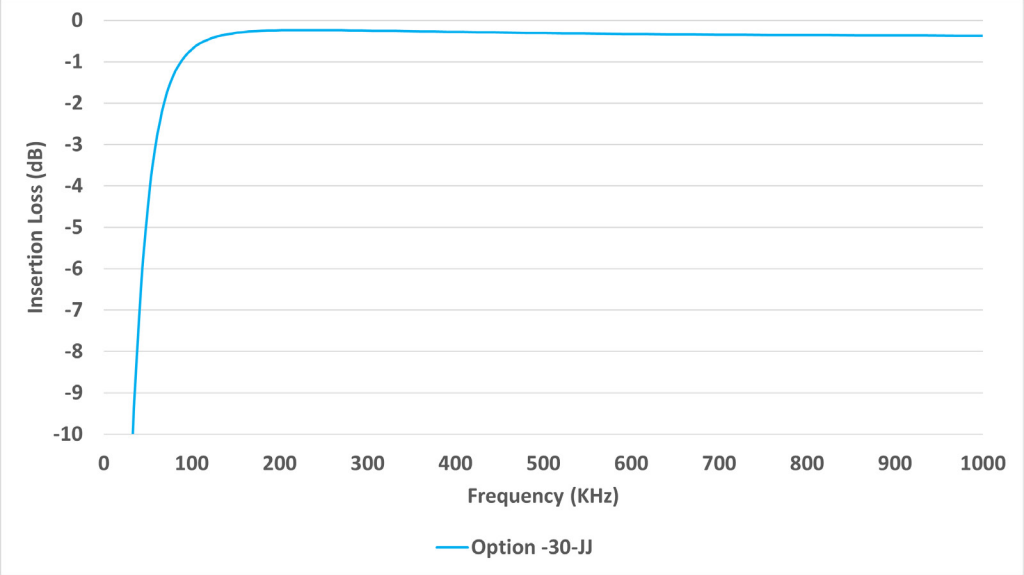

Figure 2: Typical HL9647 Low-frequency Performance (opt. -30)

HL964x Return Loss and Group Delay

Figure 3 shows Return Loss and Figure 4 shows the Group Delay on a typical HL9547 from 10 MHz to 67 GHz.

Other models show similar performance within their respective specified bandwidths.



Figure 3: Typical HL9647 Return Loss

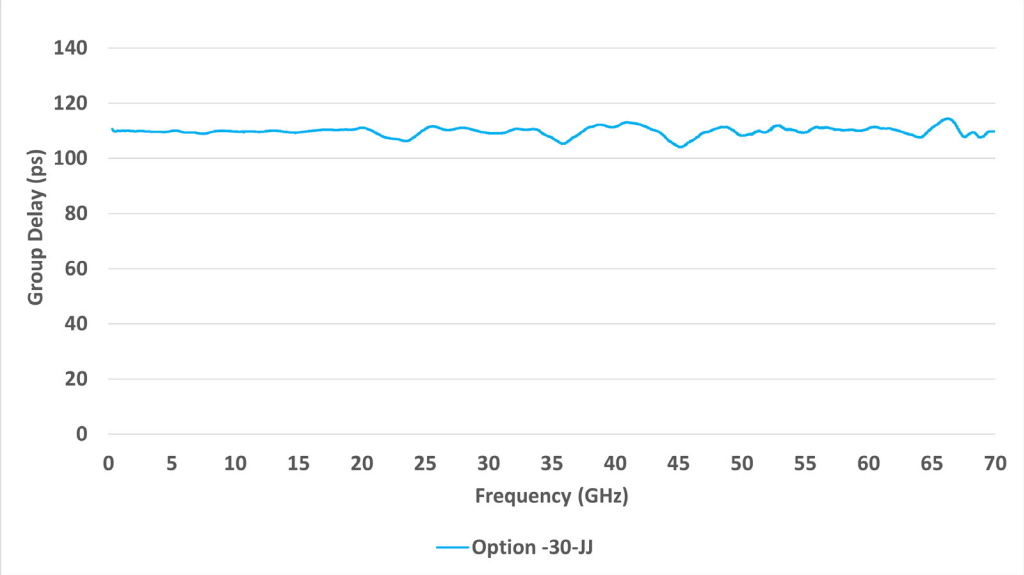

Figure 4: Typical HL9647 Group Delay

HL964x Matching

Figure 5 shows the typical amplitude match between a matched pair of HL9647 devices from 10 MHz to 67 GHz.

Other models show similar performance within their respective specified bandwidths.

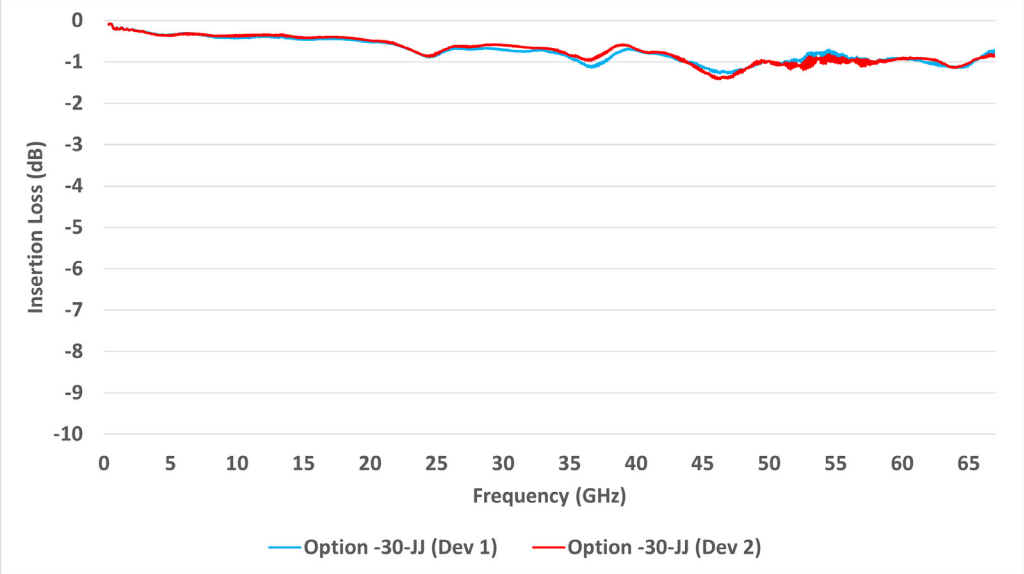

Figure 5: Typical HL9647 Amplitude Matching (opt. -M)

HL964x Eye Diagrams

The eye diagrams in *Figures 6-7* show a 32 Gbps PRBS31 pattern passed through an HL9647 (opt. -11).

All plots have an input signal amplitude of 395 mV and are shown at 89 mV/div.

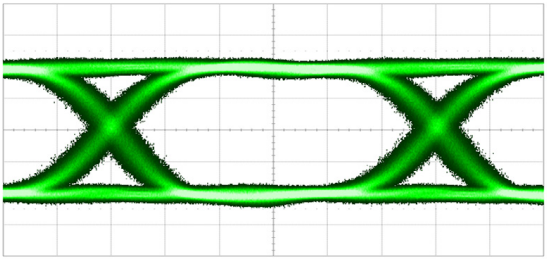

Figure 6: HL9647 32 Gpbs PRBS 31, RF Input

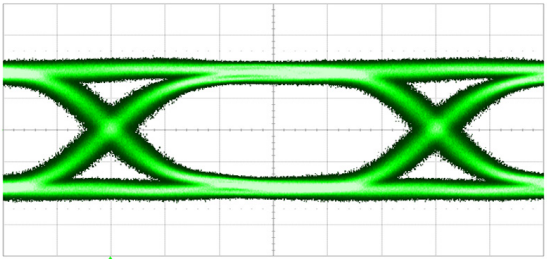

Figure 7: HL9647 32 Gpbs PRBS 31, RF Output

HL964x Dimensional Drawing

Figure 10 shows a mechanical drawing of an HL9647 (opt. -JPC) with pins for DC bias. *Figure 11* shows the HL9647 (opt. -JJS) with an SMA DC port. Unless otherwise noted, all units are in inches. See page 2 for full dimensions.

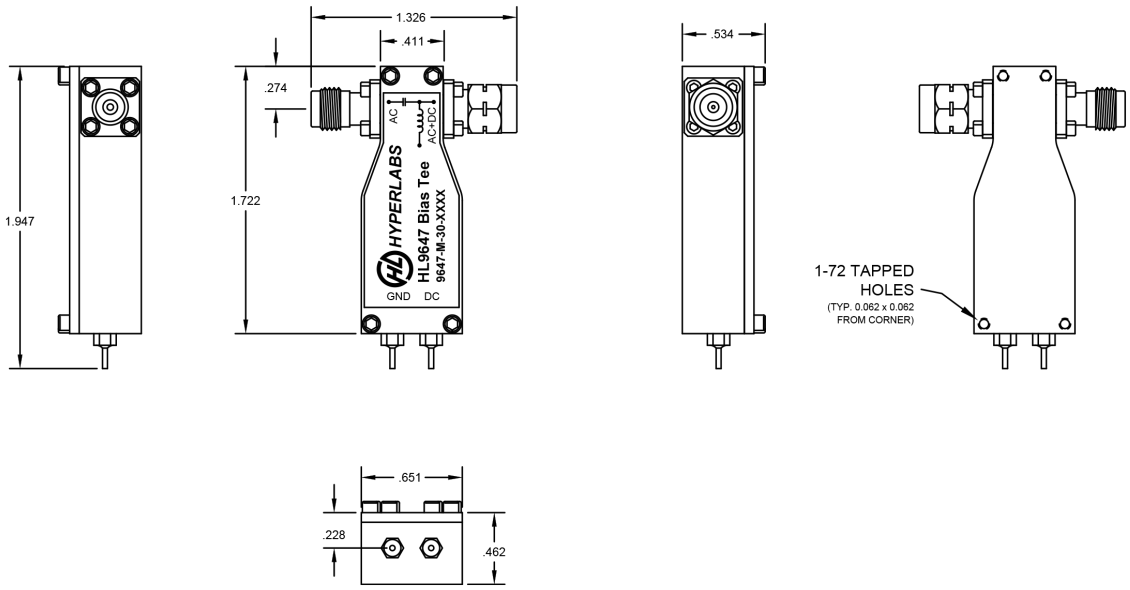

Fig 10: HL9647 with DC bias pins Mechanical Drawing

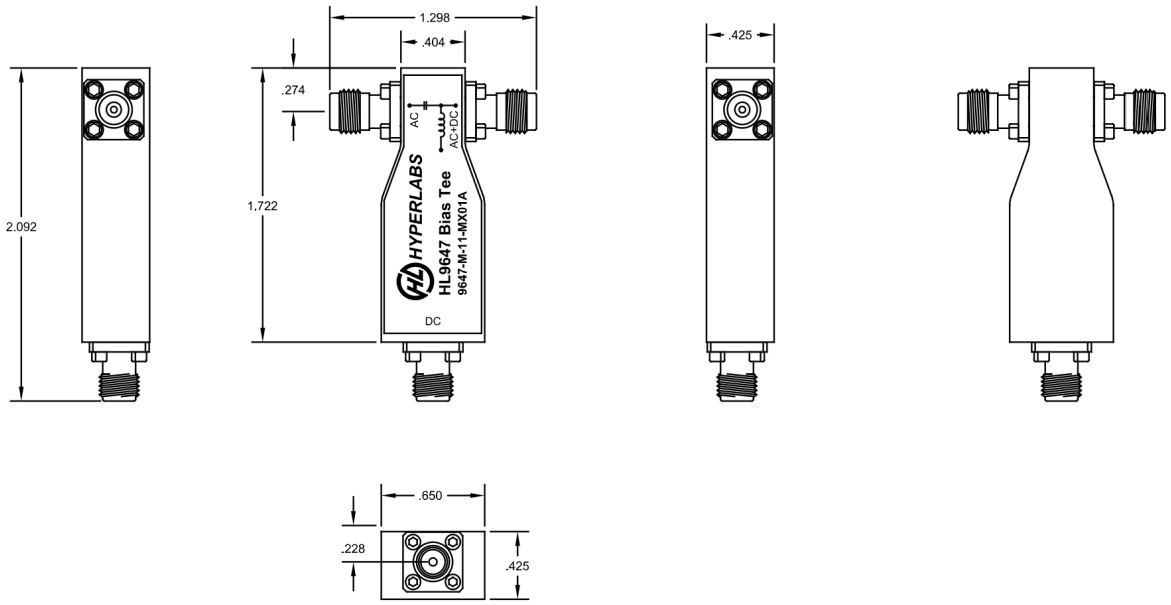

Fig 11: HL9647 with SMA DC bias port Mechanical Drawing